This document is the absolute property of DOMAX Sp. z o.o. This document must not be copied without the written permission of DOMAX Sp. z o.o. The contents thereof must not be disclosed to a third party nor be used for any unauthorized purpose. Contravention will be prosecuted.

Revsion				
Rev.	Explanation	Data	Revised by	Approved by

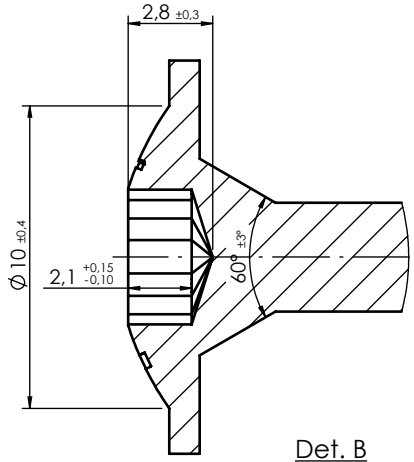

Det. B
4 : 1

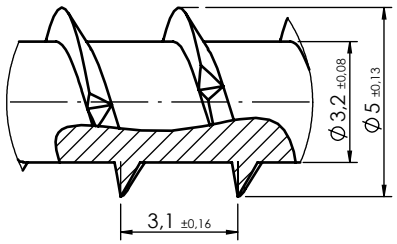

Det. F

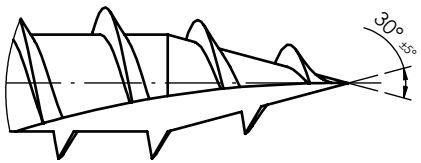

Det. A
4 : 1

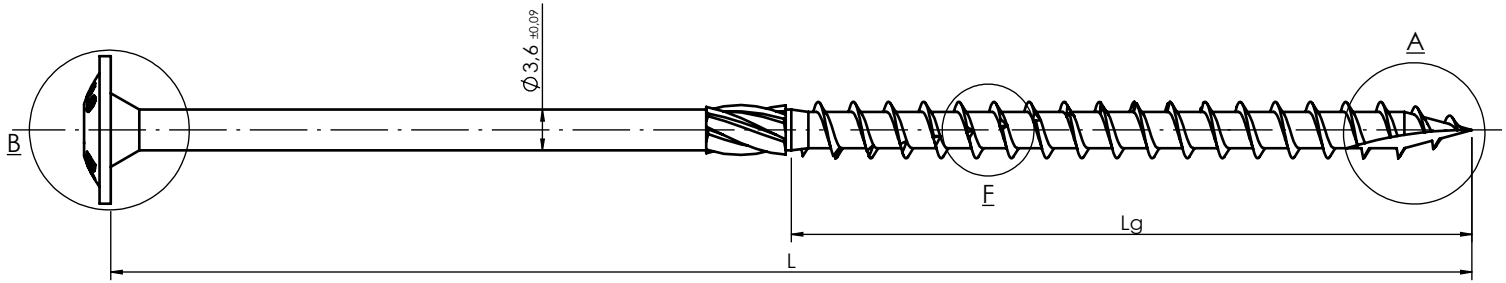

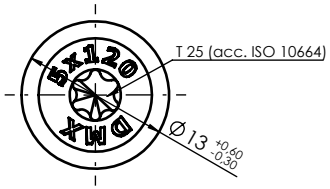

Indeks	Name	L [mm]	Tolerance	Lg [mm]	Tolerance	Surface [cm2]	Weight [g]
320503	CT 05040	40	± 1	24	± 1	8,83	4,15
320504	CT 05045	45		27		9,54	4,53
320505	CT 05050	50		30		10,25	4,9
320506	CT 05060	60		36		11,66	5,65
320507	CT 05070	70		40		13	6,41
320508	CT 05080	80		40		14,12	7,2
320509	CT 05090	90		40		15,25	8
320510	CT 05100	100		60		17,33	8,64
320512	CT05120	120	± 2	60	± 1,5	19,6	10,22

Note:
1. General tolerances EN 22768 mK.
2. Surface Fe/Zn 12c acc. EN ISO 2081

Rod	Ø2,8			10B21
Identification	Specyfication			Raw material
Design: D. Kozłowski	Checked: -		Approved: -	Note:
Drawn: D.Kozłowski	Format: A4	Scale: 1:1	Material: 10B21	Weight: -
Index:	Date: 16.10.2023	Screw CT 5		Sheet 1 / 1
domax DOMAX Sp. z o.o.		-		
		CT 5		Rev 0