This document is the absolute property of DOMAX Sp. z o.o. This document must not be copied without the written permission of DOMAX Sp. z o.o. The contents thereof must not be disclosed to a third party nor be used for any unauthorized purpose. Contravention will be prosecuted.

Rewizja				
Rewizja	Opis	Data	Zmienił	Zatwierdził

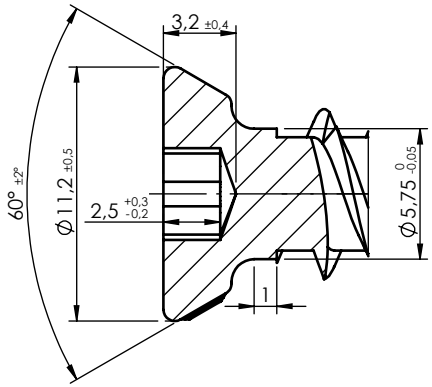

det. A

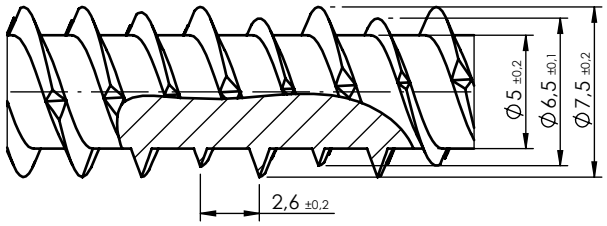

det. C

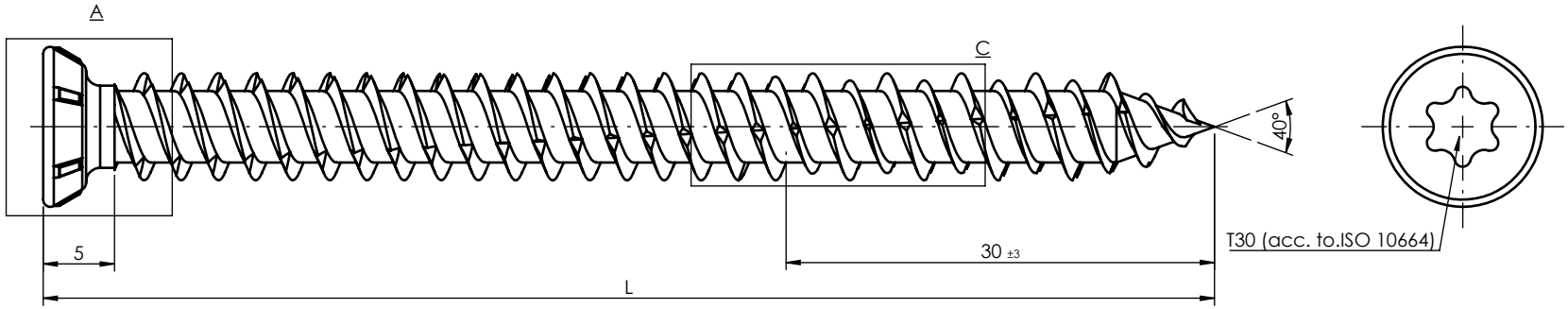

Index	Name	L [mm]	Tolerance	Surface [dm^2]	Weight [g]
	CBS 7,5x42	42	±3,0		
3377505	CBS 7,5x52	52		0,16	9,5
	CBS 7,5x62	62			
3377507	CBS 7,5x72	72		0,22	13,2
	CBS 7,5x82	82			
3377509	CBS 7,5x92	92		0,28	16,9
	CBS 7,5x102	102			
3377511	CBS 7,5x112	112		0,34	20,5
	CBS 7,5x122	122			
3377513	CBS 7,5x132	132		0,4	24,3
3377515	CBS 7,5x152	152		0,46	27,8
3377518	CBS 7,5x182	182		0,55	33,1
	CBS 7,5x202	202			
3377521	CBS 7,5x212	212		0,65	38,8
	CBS 7,5x252	252			
	CBS 7,5x300	300			

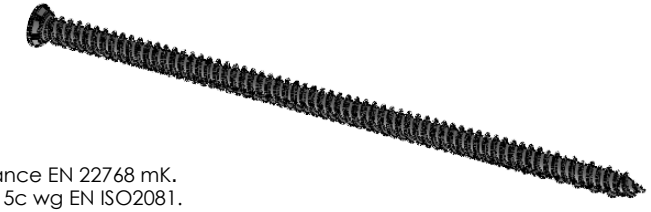

Note:
1. General tolerance EN 22768 mK.
2. Surface Fe/ZN 5c wg EN ISO2081.

Design: D. Kozłowski	Checked:		Approved: -	Note: -
Drawn: D.Kozłowski	Format: A4	Scale: 2:1	Material: 20MnB4 / 10B21	Weight: -
Index:	Date: 13.10.2023	Frame screw CBS		Sheet 1/1
domax DOMAX Sp. z o.o.		-		
		CBS 7,5		Rev 0